ON-VEHICLE INSPECTION

1. INSPECT SHIFT LEVER POSITION

(a) When shifting from the P to the R position with the engine switch on (IG) and the brake pedal depressed, make sure that the shift lever moves smoothly and moves correctly into position.

(b) Start the engine and make sure that the vehicle moves forward when shifting from the N to the D position and moves rearward when shifting to the R position. If operation cannot be done as specified, inspect the park/neutral position switch assembly and check the shift lever assembly installation condition.

REMOVAL

1. **REMOVE INSTRUMENT PANEL FINISH PANEL END LH (See page IP-13)**
2. **REMOVE INSTRUMENT PANEL FINISH PANEL END RH (See page IP-15)**
3. **REMOVE SHIFT LEVER KNOB SUB-ASSEMBLY (See page IP-16)**
4. **REMOVE UPPER CONSOLE PANEL ASSEMBLY WITH FRONT ASH RECEPTACLE (See page IP-16)**
5. **REMOVE HEATER SEAT SWITCH CONSOLE BASE (w/o Seat Heater System) (See page IP-17)**
6. **REMOVE HEATER SEAT SWITCH CONSOLE BASE (w/ Seat Heater System) (See page IP-18)**
7. **REMOVE CONSOLE BOX POCKET (See page IP-18)**
8. **REMOVE CONSOLE BOX CARPET (See page IP-18)**
9. **REMOVE CONSOLE REAR END PANEL SUB-ASSEMBLY (See page IP-19)**
10. **REMOVE REAR CONSOLE BOX ASSEMBLY (See page IP-19)**
11. **REMOVE NO. 2 CONSOLE BOX DUCT (See page AC-149)**
12. **REMOVE NO. 3 CONSOLE BOX DUCT (See page AC-149)**
13. **DISCONNECT TRANSMISSION CONTROL CABLE ASSEMBLY**
    (a) Disconnect the end of the transmission control cable from the shift lever assembly.
    (b) Disconnect the transmission control cable assembly from the shift lever assembly while pushing the 2 claws of the floor shift cable.

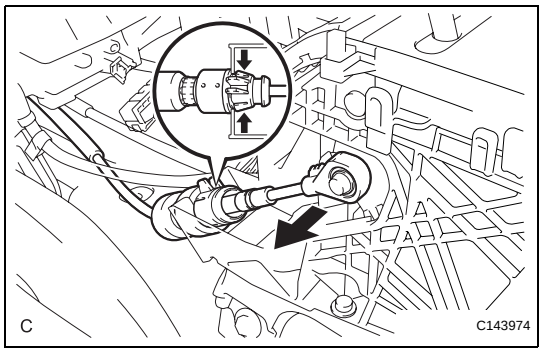

AX

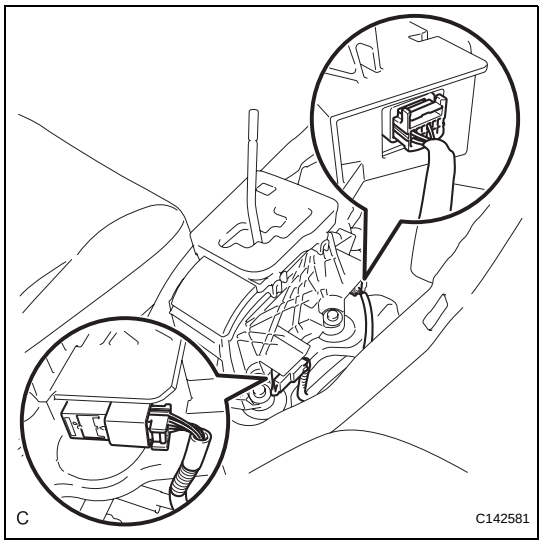

14. REMOVE SHIFT LEVER ASSEMBLY

(a) Disconnect the shift lock control ECU connector and transmission control switch wire connector.

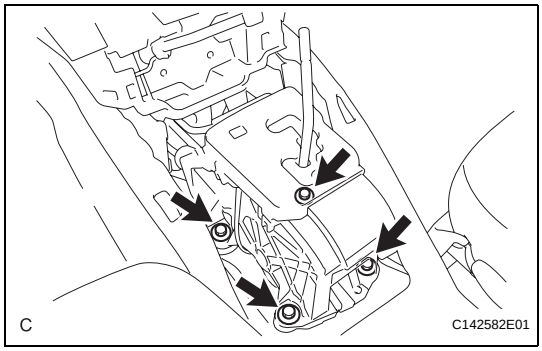

(b) Remove the 4 bolts and shift lever assembly.

DISASSEMBLY

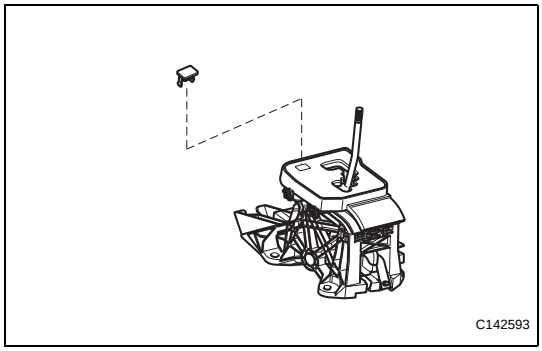

1. REMOVE SHIFT LOCK RELEASE BUTTON COVER

(a) Using a screwdriver, remove the shift lock release button cover from the position indicator housing assembly.

2. REMOVE INDICATOR LIGHT WIRE SUB-ASSEMBLY

(a) Turn the indicator light guide counterclockwise.

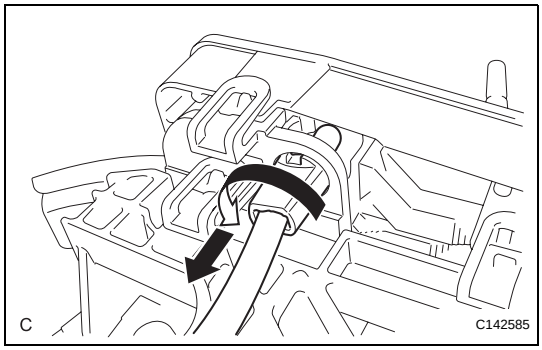

(b) Align the indicator light guide key with the groove on the shift lever assembly to remove the indicator light wire.

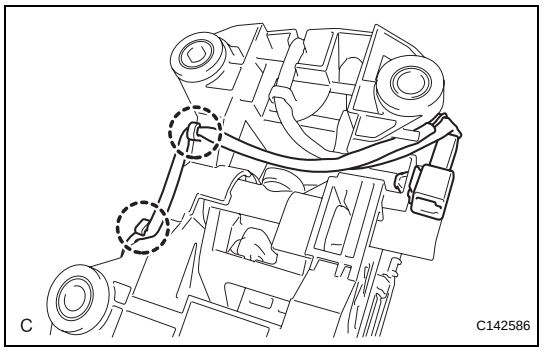

(c) Release the indicator light wire from the 2 clamps on the shift lever assembly.

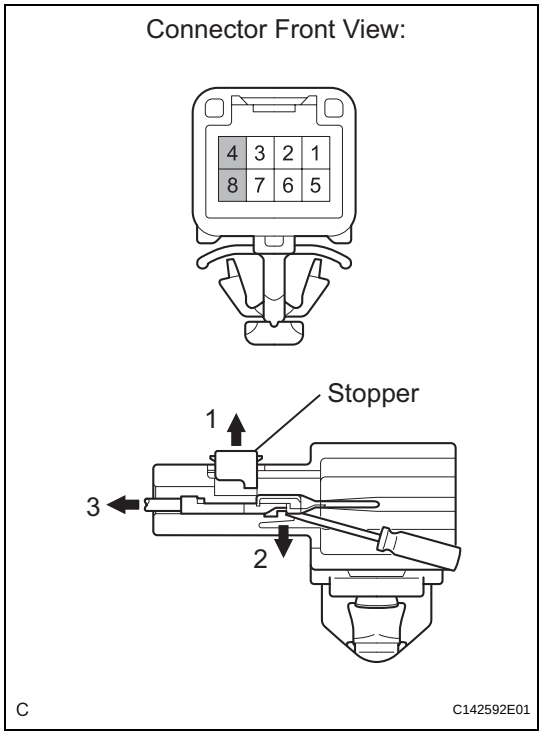

(d) Using a screwdriver, release the stopper.
(e) Using a screwdriver, disengage the locking lug of terminals (4) and (8), and pull the terminals out from the rear of the connector.
(f) Remove the bulb and cap.

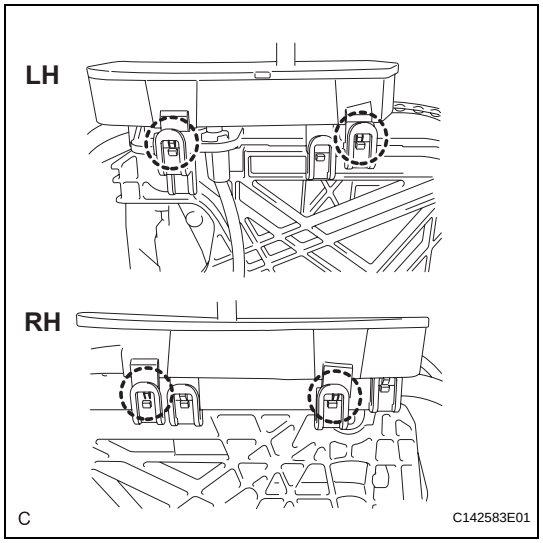

3. REMOVE POSITION INDICATOR HOUSING ASSEMBLY

(a) Detach the 4 claws and remove the position indicator housing assembly from the lower shift lever assembly.

AX

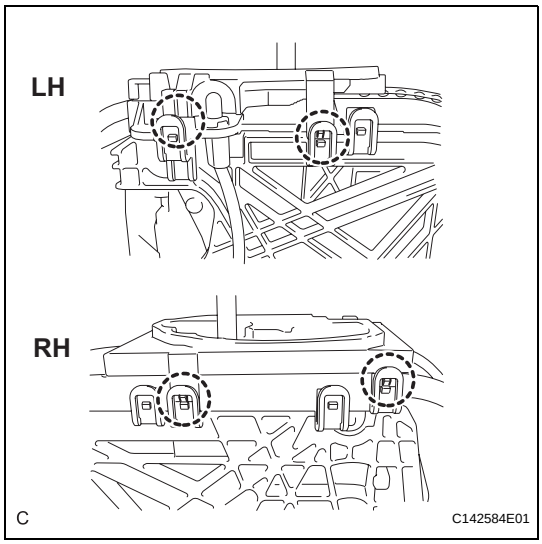

4. REMOVE POSITION INDICATOR LENS

(a) Detach the 4 claws and remove the position indicator lens from the lower shift lever assembly.

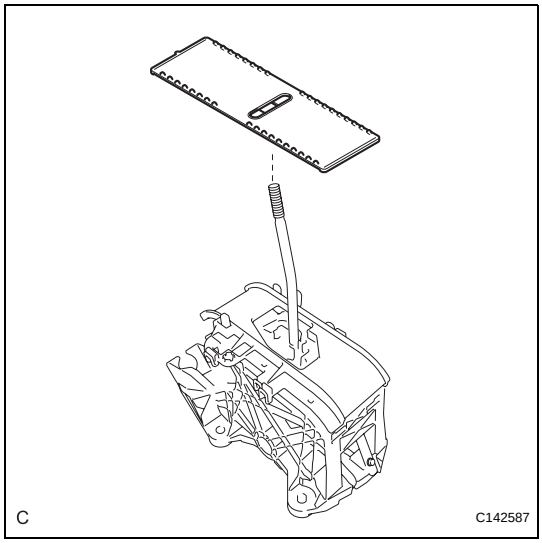

5. REMOVE POSITION INDICATOR SLIDE COVER

(a) Remove the position indicator slide cover from the lower shift lever assembly.

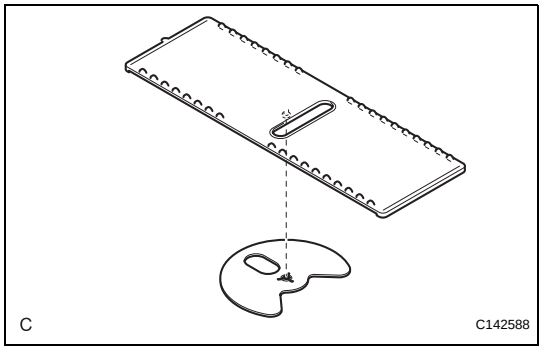

(b) Separate the No. 2 position indicator slide cover from the position indicator slide cover.

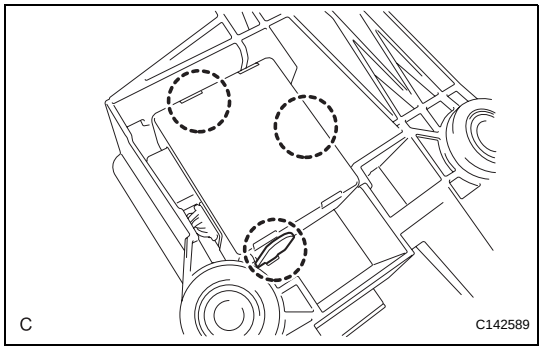

6. REMOVE SHIFT LOCK CONTROL ECU

(a) Detach the 3 claws and remove the shift lock control ECU from the lower shift lever assembly.

(b) Disconnect the shift lock solenoid connector.